Ship loose items:
NONE

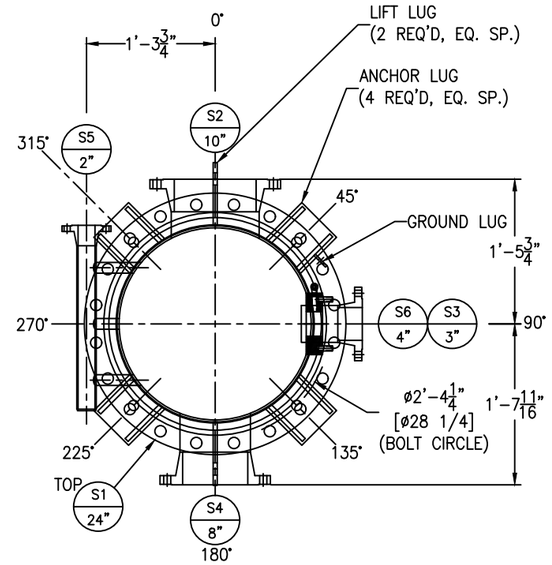

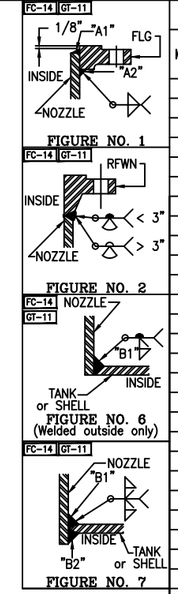

NOZZLE SCHEDULE

MARK	SERVICE	SIZE	RATING	TYPE / STYLE	NECK SCHED.	PROJECTION EXT. (℄)	PROJECTION INT. (MIN.)	WELD FIGURE	REPAD SIZE (WIDTH X THK.)	WELD SIZE "A1"	"A2"	"B1"	"B2"	"C1"	"C2"
S1	PROCESS INLET	24"	150#	RFSO	–	–	–	1	–	1/4	3/8	–	–	–	–
S2	PROCESS DRAIN	10"	150#	RFWN	40S	SEE DWG	–	2,6	–	–	–	1/4	–	–	–
S3	LEVEL TRANSMITTER	3"	150#	SP. STUDPAD	–	–	–	6	–	–	–	1/4	–	–	–
S4	PROCESS OUTLET	8"	150#	RFWN	40S	SEE DWG	–	2,6	–	–	–	1/4	–	–	–
S5	DILUTION INLET	2"	150#	RFWN W/STUB PIPE	40S	SEE DWG	SEE DWG	2	–	–	–	–	–	–	–
S6	INSPECTION OPENING	4"	150#	RFWN	40S	6"	1"	2,7	–	–	–	1/4	1/8	–	–

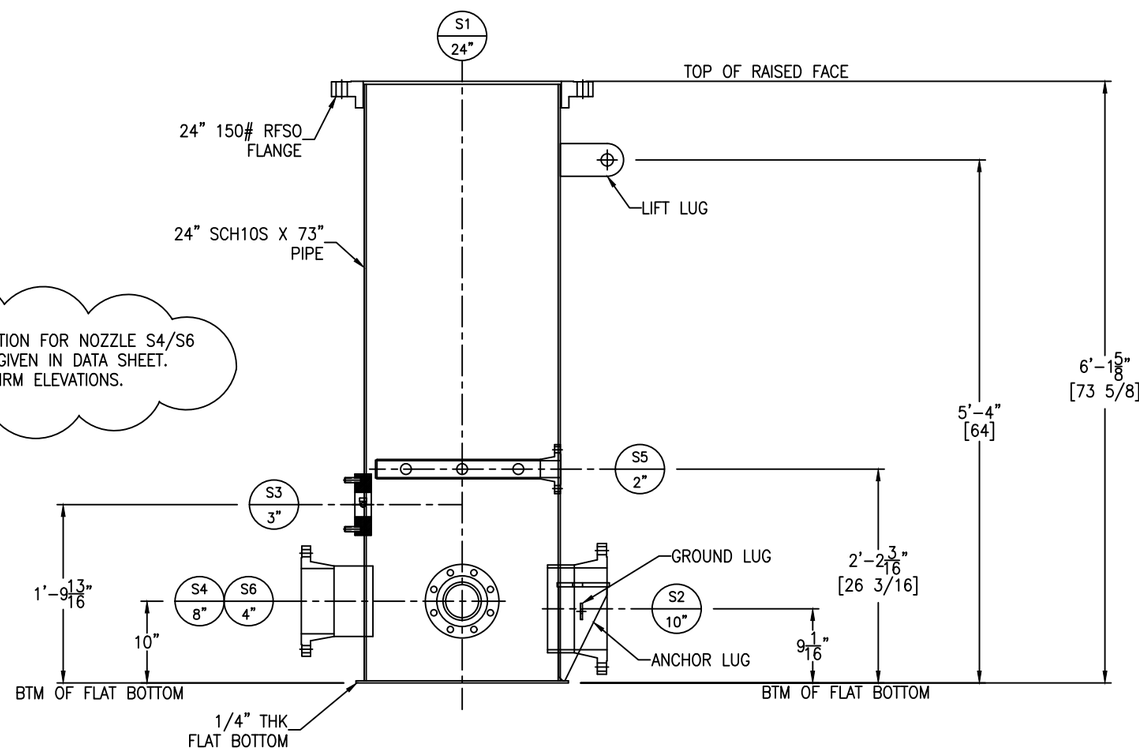

MATERIALS OF CONSTRUCTION

	VESSEL
SHELL	SA312-316/316L WLD
FLAT BOTTOM/SLOPE BOTTOM	SA240-316/316L
BODY FLANGE	SA182F-316/316L
NOZZLE NECKS	SA312-316/316L WLD
NOZZLE FLANGES	SA182F-316/316L
SPECIAL STUDPAD	SS316
MANWAY FLANGES	–
GASKETS	–
BOLTS/STUDS	–
NUTS	–
REPADS	–
COUPLINGS	–
SUPPORTS/HOLD DOWNS	SA240-304/304L
LIFTING LUGS	SA240-304/304L
STIFFENERS	–
INSULATION RINGS	–
GROUND LUG	SA240-304/304L
BAFFLE	–
LADDER	–
TANK CLIPS (LADDER)	–
HANDRAIL	–
HANDRAIL CLIPS	–
PLATFORM	–
PLATFORM CLIPS	–
DIPTUBE SUPPORT	–
JACKET SHELL	–
JACKET HEADS	–
JACKET NOZZLE NECKS	–
JACKET NOZZLE FLANGES	–

DESIGN DATA

	VESSEL
DESIGN AND FAB. CODE	API650 (AS APPLICABLE)
CERT. STAMP REQ'D.	NO
DESIGN PRESSURE	ATM
DESIGN TEMPERATURE	212° F
MIN. DESIGN METAL TEMP.	-20° F @ ATM
OPERATING PRESSURE	ATM
OPERATING TEMPERATURE	140° F
JOINT EFFICIENCY HEADS	0.70
JOINT EFFICIENCY SHELL	0.70
CORROSION ALLOWANCE	0"
SPECIFIC GRAVITY	1.0
EARTHQUAKE ZONE	Ss = (0.526) S1 = (0.230)
WIND LOAD	99 MPH
STRESS RELIEF	NOT REQ'D
RADIOGRAPHIC EXAM	NOT REQ'D
DYE PENETRANT EXAM	NOT REQ'D
MAGNETIC PARTICLE EXAM	NOT REQ'D
HYDROSTATIC TEST	NOT REQ'D
PNEUMATIC TEST	2 PSIG/ GAUGE #1
JKT HYDRO TEST	–
JKT DESIGN AND FAB. CODE	–
JKT CERT. STAMP REQ'D.	–
JKT DESIGN PRESSURE	–
JKT DESIGN TEMPERATURE	–
JKT MIN. DESIGN METAL TEMP.	–
JKT OPERATING PRESSURE	–
JKT OPERATING TEMPERATURE	–
JKT JOINT EFFICIENCY HEADS	–
JKT JOINT EFFICIENCY SHELL	–

VESSEL FINISH

INTERIOR WELD TREATMENT:	SAV TANK STANDARD
EXTERIOR WELD TREATMENT:	SAV TANK STANDARD
SAV TANK FINISHING STANDARD:	SEE NOTE 6
INSULATION:	N/A
PAINTING:	N/A

VESSEL CAPACITY AND WEIGHTS

OPERATING CAPACITY	–
FULL CAPACITY	135 GAL.
EMPTY SHIPPING WEIGHT	1,200 LBS.
WEIGHT FULL OF WATER	2,300 LBS.
WEIGHT FULL OF PRODUCT	2,300 LBS.

QUALITY CONTROL

ENG. _____ DATE: _____

Q.C. _____ DATE: _____

This drawing is issued for customer approval. please review, make approval changes (if any) in red. check the appropriate box, sign & date.

- ☐ Approval – no changes. Please proceed with fabrication.
- ☐ Approved as noted. Please proceed with fabrication
- ☐ Not approved. Please make changes and resubmit.

Customer signature _____ Date _____

GENERAL NOTES

1.) COVER ALL FLANGES, OPENINGS & MACHINED SURFACES PRIOR TO SHIPMENT UNLESS OTHERWISE NOTED.
2.) BOLT HOLES TO STRADDLE 0° & 180° UNLESS OTHERWISE NOTED.
3.) NOZZLE REPADS TO HAVE (1) ø1/4" TELL-TALE HOLES ON HORIZONTAL CENTER LINE.
ALL OTHER REPADS TO HAVE (1) ø1/4" WEEP HOLE AT LOWEST POINT ON PAD.
4.) MANUFACTURING TOLERANCE TO BE IN ACCORDANCE WITH API STANDARD 650 7.5.
5.) ASME MATERIALS TO CONFORM TO THE FOLLOWING: FLANGES – B16.5, FITTINGS – B16.9 & COUPLINGS – B16.11.
6.) PICKLE ALL EXTERIOR WELDS. PASSIVATE INTERIOR & EXTERIOR OF VESSEL.

REVISIONS

REV	D.BY	C.BY	DATE	DESCRIPTION
2				AS BUILT
1	AD	RS	10/28/25	CERTIFIED
0	AD	RS	9/27/25	APPROVAL

Savannah Tank & Equipment Corp.
1517 Telfair Road, Savannah, GA 31415
(912) 233-8902

DRAWN BY: AD
CHK'D BY: RS
APPROVED BY: NP
SCALE: 1" = 1'-0"

TOTAL QUALITY PRODUCTS △1
HC-BLEACH TOWER STAND PIPE
EQUIP. #420-TK-42003
CUST. PO #C000139275

DRAWING NO.: 094-25-1 SHT 1 OF 2 REV. SET 1

FC-14

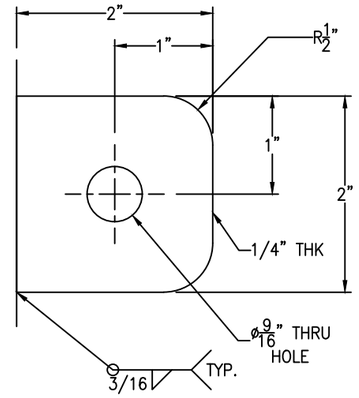

GROUND LUG IS LOCATED @ 45°

GROUND LUG DETAIL

(1 REQ'D) SCALE: 1'-0" = 1'-0"

FC-14

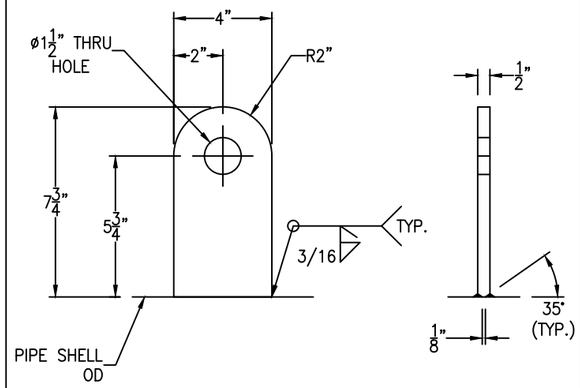

LIFT LUG DETAIL

(2 REQ'D) SCALE: 3" = 1'-0"

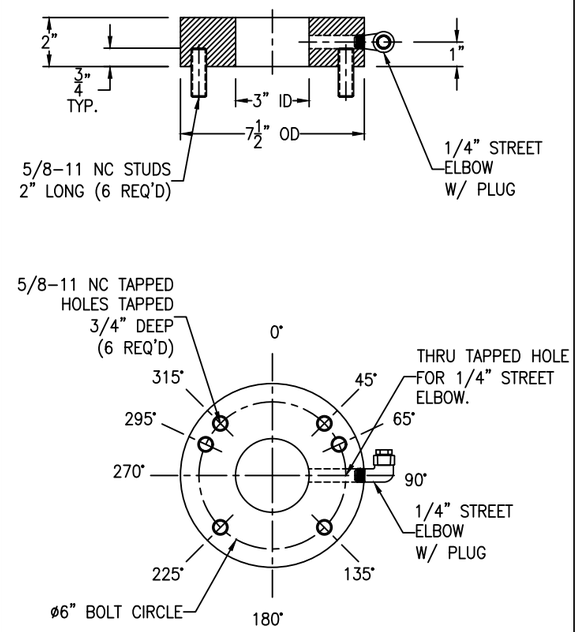

SPECIAL STUDPAD (S3) DETAIL

(1 REQ'D) SCALE: 3" = 1'-0"

FC-14

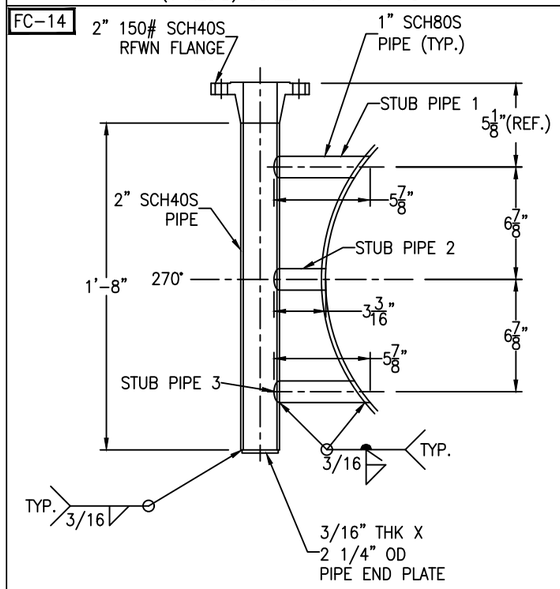

NOZZLE S5 DETAIL

SCALE: 2" = 1'-0"

FC-14

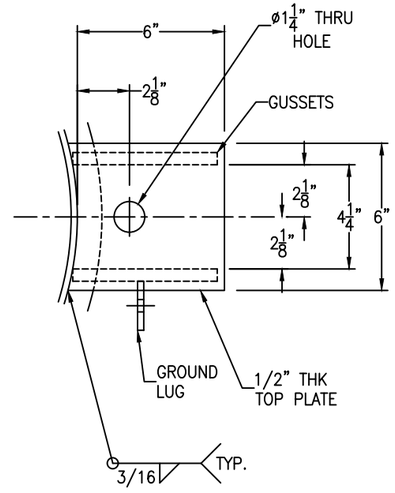

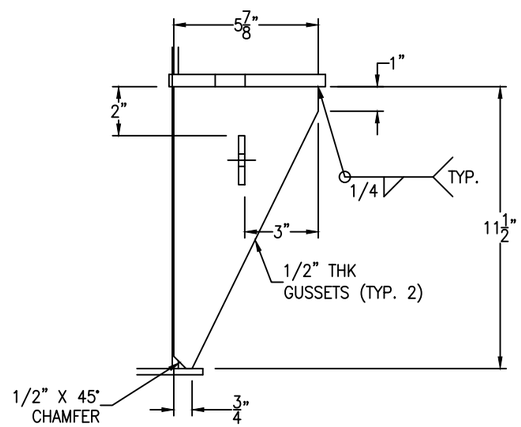

ANCHOR LUG DETAIL

(4 REQ'D) SCALE: 3" = 1'-0"

FC-14

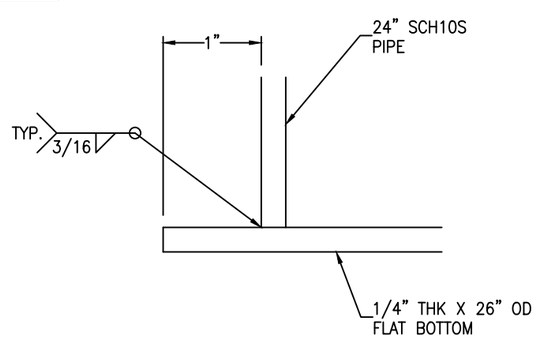

FLAT BOTTOM DETAIL

SCALE: 1'-0" = 1'-0"

REV	D.BY	C.BY	DATE	DESCRIPTION
2				AS BUILT
1	AD	RS	10/28/25	CERTIFIED
0	AD	RS	9/27/25	APPROVAL

△1 REVISIONS

Savannah Tank & Equipment Corp.
1517 Telfair Road, Savannah, GA 31415
(912) 233-8902

DRAWN BY: AD
CHK'D BY: RS
APPROVED BY: NP
SCALE: 1/4" = 1'-0"

TOTAL QUALITY PRODUCTS △1
HC-BLEACH TOWER STAND PIPE
EQUIP. #420-TK-42003
CUST. PO #C000139275

DRAWING NO.: 094-25-2 | SHT 2 OF 2 | REV. SET 1